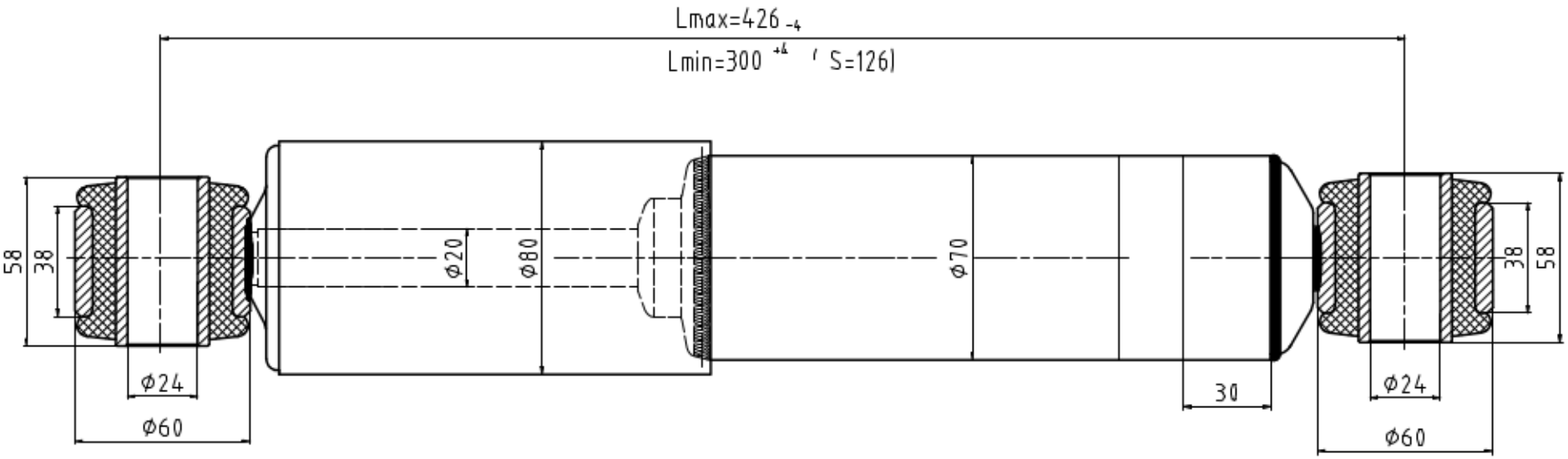

V(m/s)	0.079	0.157			
Pf(N)		14800			
Py(N)		4595			
S(mm)	60				

DESIGNED BY	CHECKED BY	APPROVED BY DATE	FILE NAME	DATE	SCALE

SHOCK ABSORBER DRAWING

DRAWING NUMBER 21222271