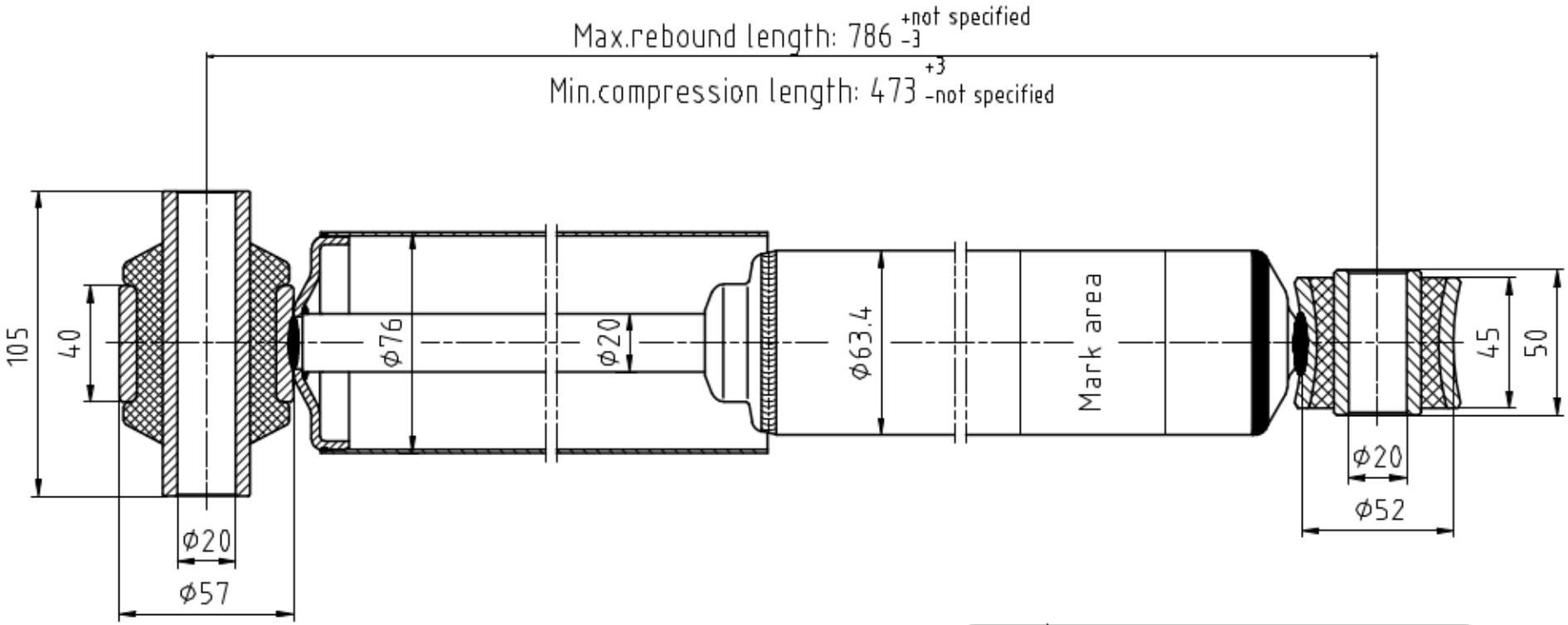


| V(m/s) | 0.079 | 0.157 | 0.314 | 0.520 | 0.750 |
|---|---|---|---|---|---|
| Pf(N) | | | | 10930 | |
| Py(N) | | | | 870 | |
| S(mm) | 60 | | (N) | | |

| DESIGNED BY | CHECKED BY | APPROVED BY DATE | FILE NAME | DATE | SCALE |
|---|---|---|---|---|---|
| | | | | | |

SHOCK ABSORBER DRAWING

DRAWING NUMBER

0053261200